Input

A

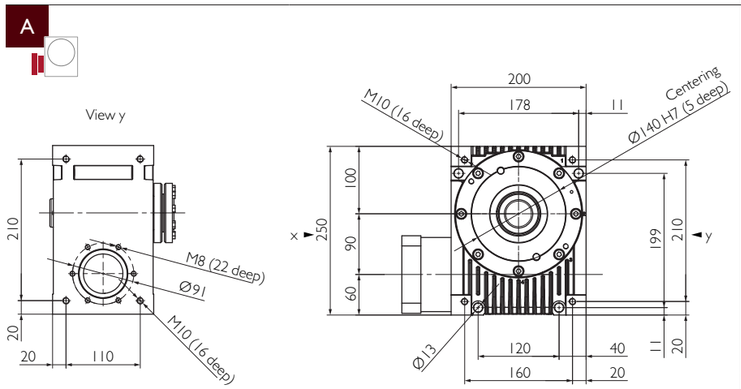

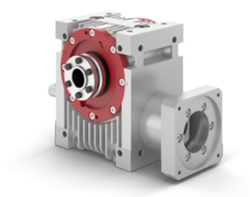

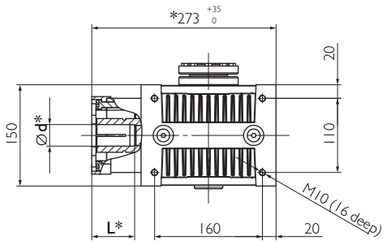

Example HPG 090 B1

B

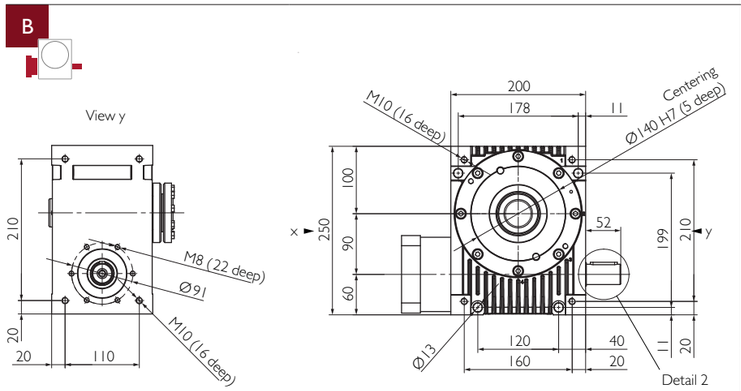

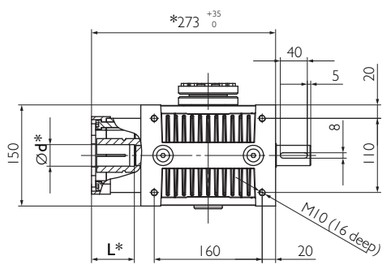

* Motor-specific gearbox dimensions
Ød: Ø motor shaft [mm], 14 ≤ **Ød** ≤ 42
L: Motor shaft length [mm], 40 ≤ **L** ≤ 82

Detail 2

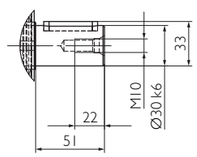

Output

1

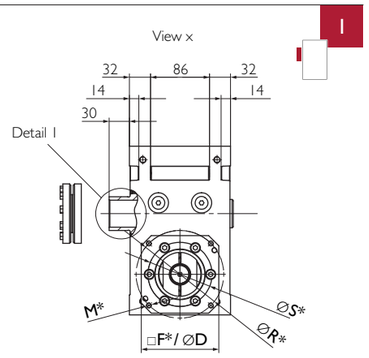

2

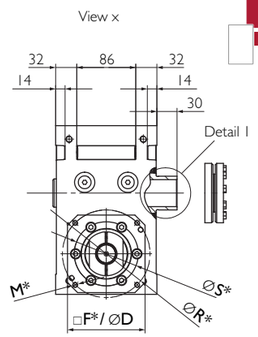

3

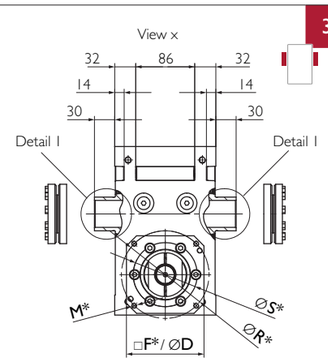

Detail I

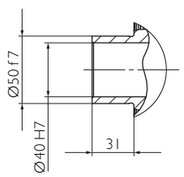

* Motor-specific gearbox dimensions
S: min. 75 [mm], **R:** Pitch circle Ø [mm], **M:** Bore hole Ø or thread [mm], □**F**/Ø**D:** Specify flange [mm]

Ratio		i		2	3	4	5	6	8	10	13.33	16	24	30	47	60
Nominal torque at the output Efficiency	n_{1N} = 500 rpm	T_{2N}	[Nm]	469	679	784	761	674	782	726	712	700	727	527	752	527
		η	[%]	92	92	91	91	90	88	87	84	80	74	71	61	50
	n_{1N} = 1000 rpm	T_{2N}	[Nm]	350	528	624	615	551	644	601	592	660	645	527	640	527
		η	[%]	92	92	92	92	91	89	88	85	82	76	72	63	57
	n_{1N} = 1500 rpm	T_{2N}	[Nm]	279	432	518	516	466	547	513	507	565	553	527	550	527
		η	[%]	92	93	92	92	91	90	88	85	83	77	72	64	57
	n_{1N} = 3000 rpm	T_{2N}	[Nm]	174	279	343	348	318	377	356	354	395	388	396	386	396
		η	[%]	92	92	92	92	91	89	88	85	82	76	70	62	55
	n_{1N} = 4500 rpm	T_{2N}	[Nm]	126	206	257	262	241	288	273	272	303	298	305	297	305
		η	[%]	91	92	92	91	90	88	86	83	81	74	68	60	53
Max. acceleration torque		T_{2B}	[Nm]	470	790									530	790	530
Emergency stop torque		T_{2Not}	[Nm]	900										700	900	700
Idling torque[a)]		T_{012}	[Nm]	2.8			2.5				2					
Max. input speed		n_{1Max}	[rpm]	4500												
Max. backlash[b)] at the output	PS	j_t	[arcmin]	<10	<8	<7	<7	<6	<6					<5		
	PR	j_t	[arcmin]	<6.5	<5	<4.5	<4	<4	<3.5					<3		
Torsional rigidity vom Abtrieb zum Eintrieb		C_{t21}	[Nm/arcmin]	5.5	10.8	15.9	18.3	20.8	23.3	25.8	28.3	31.3	33.2	32	35	32
Stability at the output		C_{2K}	[Nm/arcmin]	95												
Max. axial force[c)d)] at the output		F_{a2max}	[N]	6200	8200	7800	9200	11000	12000	14000	17000	18000	18000	18000	19000	19000
Max. radial force[c)e)] at the output		F_{r2max}	[N]	5300	6400	5500	5800	6500	6800	7500	8400	8600	8700	8800	8800	8800
Max. overturning torque[c)] at the output		M_{2max}	[Nm]	590	700	600	640	710	750	830	920	940	960	970	970	970
Max. axial force[c)d)] at the input		F_{a1max}	[N]	3100	1600	1100	1700	2800	2000	2700	2900	2300	2500	2700	2600	2800
Max. radial force[c)f)] at the input		F_{r1max}	[N]	1500	910	640	990	1600	1200	1500	1700	1300	1400	1600	1500	1600
Mass moment of inertia[g)]	Type 1[h)]	J_1	[10^{-5} kg m²]	383	206	144	116	100	85	78	72	70	67	67	66	65
	Type 2[i)]	J_1	[10^{-5} kg m²]	453	276	214	186	170	155	148	142	140	137	136	136	135
Service life		L_h	[h]	25000												
Weight without motor components		m	[kg]	25												
Max. permissible housing temperature			[°C]	+90												
Ambient temperature			[°C]	-15 up to +50												
Lubrication		synthetic gear oil (as per DIN 51502: CLP PG 460)														
Painting		None														
Protection class		IP65														

a) approximate, at n_1 = 3000 rpm and operating temperature.
b) Precision grade PS (standard backlash) for classic mechanical engineering applications.
Precision grade PR (reduced backlash) for precise process applications.
c) Bearing forces: Values valid at n_1 = 1500 rpm; ½ T_{2N} and duty cycle of 40%.
Consult with Güdel for composite bearing forces, axial and radial forces.
c) d) in relation to shaft center.
c) e) at a distance of 110 mm from the middle of the casing.
c) f) at a distance of 125 mm from the middle of the casing.
g) in relation to the input, including coupling and shrink disc at the output (output 1 & 2), with two shrink discs (output 3) increase values by 115/i².
c) h) Motor shaft diameter **Ød** from Ø14 to Ø35, calculated at Ø24mm.
c) i) Motor shaft diameter **Ød** from Ø36 to Ø42, calculated at Ø38mm.

Bearing forces

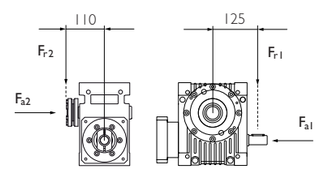

at the output at the input

Package

			Output Flange including Bearing & Pinion				
Radial rigidity	C_3	[N/mm]	45000				
Speed	n_{2N}	[rpm]	1500	750	400	150	100
Max. radial force[j)]	F_{rmax}	[N]	4800	5900	7200	8800	9700

j) Bearing forces: Values valid at duty cycle of 40% at a distance of 25 mm from the end of the bearing.

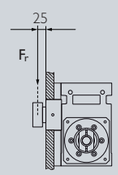

Input

C

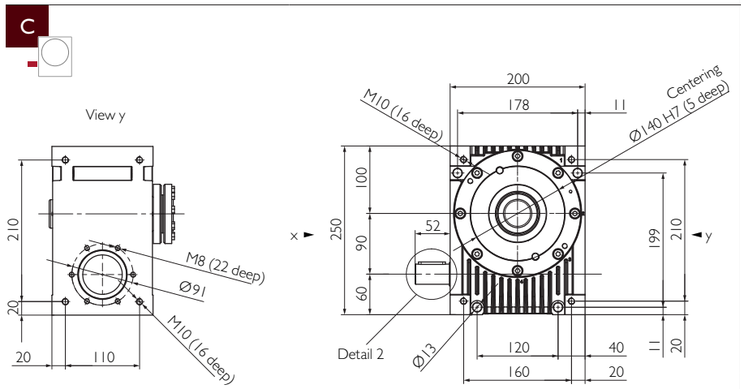

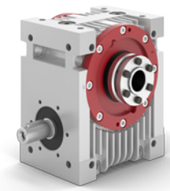

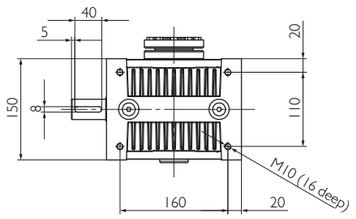

Example HPG 090 C2

D

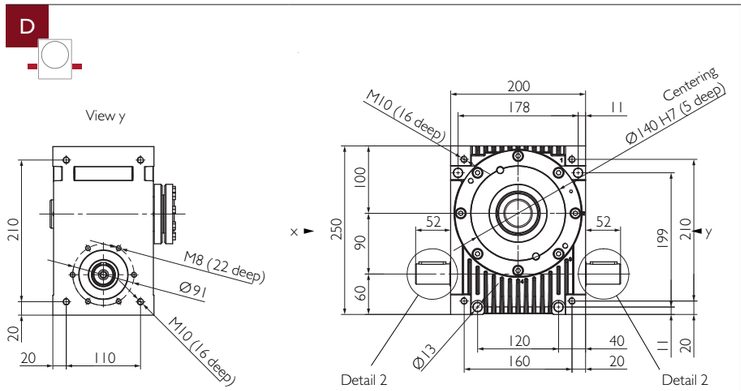

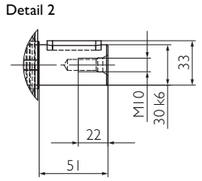

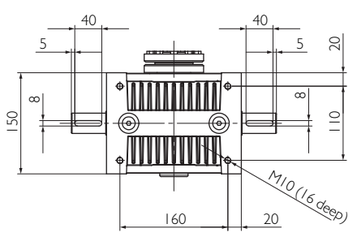

Output

1

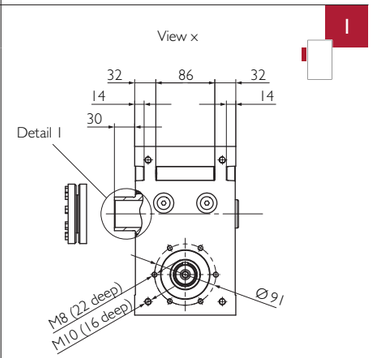

2

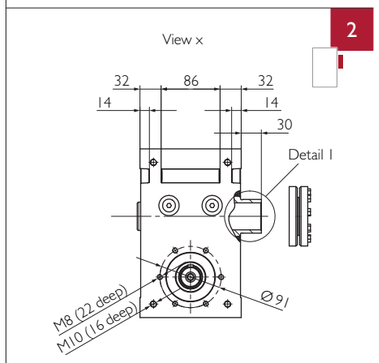

3

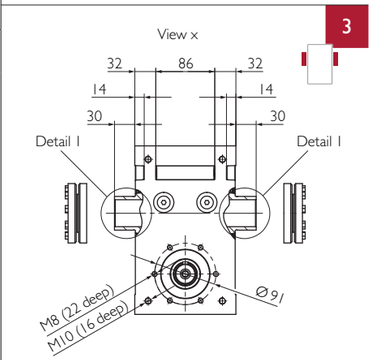

Detail 1

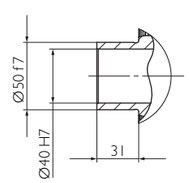

Ratio	i			2	3	4	5	6	8	10	13.33	16	24	30	47	60
Nominal torque at the output Efficiency	n_{1N} = 500 rpm	T_{2N}	[Nm]	469	679	784	761	674	782	726	712	700	727	527	752	527
		η	[%]	92	92	91	91	90	88	87	84	80	74	71	61	50
	n_{1N} = 1000 rpm	T_{2N}	[Nm]	350	528	624	615	551	644	601	592	660	645	527	640	527
		η	[%]	92	92	92	92	91	89	88	85	82	76	72	63	57
	n_{1N} = 1500 rpm	T_{2N}	[Nm]	279	432	518	516	466	547	513	507	565	553	527	550	527
		η	[%]	92	93	92	92	91	90	88	85	83	77	72	64	57
	n_{1N} = 3000 rpm	T_{2N}	[Nm]	174	279	343	348	318	377	356	354	395	388	396	386	396
		η	[%]	92	92	92	92	91	89	88	85	82	76	70	62	55
	n_{1N} = 4500 rpm	T_{2N}	[Nm]	126	206	257	262	241	288	273	272	303	298	305	297	305
		η	[%]	91	92	92	91	90	88	86	83	81	74	68	60	53
Max. acceleration torque		T_{2B}	[Nm]	470	790									530	790	530
Emergency stop torque		T_{2not}	[Nm]	900										700	900	700
Idling torque[a)]		T_{012}	[Nm]	2.8			2.5				2					
Max. input speed		n_{1Max}	[rpm]	4500												
Max. backlash[b)] at the output	PS	j_t	[arcmin]	<10	<8	<7	<7	<6	<6					<5		
	PR	j_t	[arcmin]	<6.5	<5	<4.5	<4	<4	<3.5					<3		
Torsional rigidity vom Abtrieb zum Eintrieb		C_{t21}	[Nm/arcmin]	5.5	10.8	15.9	18.3	20.8	23.3	25.8	28.3	31.3	33.2	32	35	32
Stability at the output		C_{2K}	[Nm/arcmin]	95												
Max. axial force[c)d)] at the output		F_{a2max}	[N]	6200	8200	7800	9200	11000	12000	14000	17000	18000	18000	18000	19000	19000
Max. radial force[c)e)] at the output		F_{r2max}	[N]	5300	6400	5500	5800	6500	6800	7500	8400	8600	8700	8800	8800	8800
Max. overturning torque[c)] at the output		M_{2max}	[Nm]	590	700	600	640	710	750	830	920	940	960	970	970	970
Max. axial force[c)d)] at the input		F_{a1max}	[N]	3100	1600	1100	1700	2800	2000	2700	2900	2300	2500	2700	2600	2800
Max. radial force[c)f)] at the input		F_{r1max}	[N]	1500	910	640	990	1600	1200	1500	1700	1300	1400	1600	1500	1600
Mass moment of inertia[g)]		J_1	[10^{-5} kg m²]	336	160	98	70	54	39	32	26	24	21	20	19	19
Service life		L_h	[h]	25000												
Weight without motor components		m	[kg]	23												
Max. permissible housing temperature			[°C]	+90												
Ambient temperature			[°C]	-15 up to +50												
Lubrication		synthetic gear oil (as per DIN 51502: CLP PG 460)														
Painting		None														
Protection class		IP65														

a) approximate, at n_1 = 3000 rpm and operating temperature.

b) Precision grade PS (standard backlash) for classic mechanical engineering applications.
Precision grade PR (reduced backlash) for precise process applications.

c) Bearing forces: Values valid at n_1 = 1500 rpm; ½ T_{2N} and duty cycle of 40%.
Consult with Güdel for composite bearing forces, axial and radial forces.
c) d) in relation to shaft center.
c) e) at a distance of 110 mm from the middle of the casing.
c) f) at a distance of 125 mm from the middle of the casing.

g) in relation to the input, including shrink disc at the output (output 1 & 2), with two shrink discs (output 3) increase values by 115/i².

Bearing forces

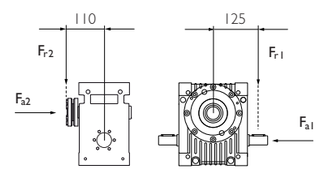

at the output at the input

Package

			Output Flange including Bearing & Pinion				
Radial rigidity	C_3	[N/mm]	45000				
Speed	n_{2N}	[rpm]	1500	750	400	150	100
Max. radial force[j)]	F_{rmax}	[N]	4800	5900	7200	8800	9700

j) Bearing forces: Values valid at duty cycle of 40% at a distance of 25 mm from the end of the bearing.

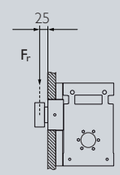

Output Flange including Bearing & Pinion[a)]

Package

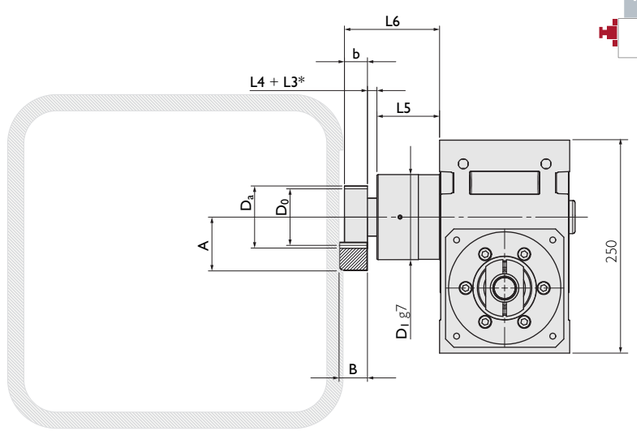

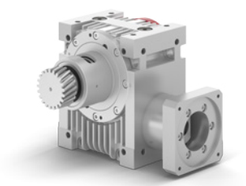

Example HPG 090 C1 Package

Package

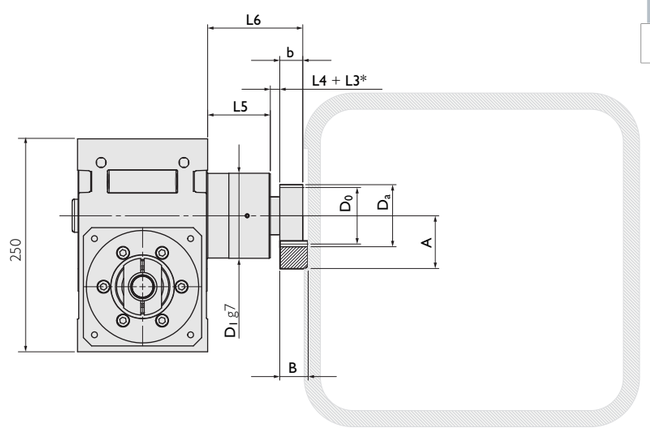

a) Output flange in the area of the bearing is provided by the customer. Hole diameter tolerance H8.

* **L3** for additional distance ring.

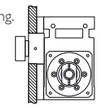

Geometric information

Helical modular pitch	Art. Nr.	m	z	A	b	B	D_a	D_0	D_1	L4	L5	L6
Pinion 1	211420	3	20	57.83	30	29	69.66	63.66	98	12.5	63	105.5
											104.5	147
Pinion 2	211520	4	20	77.44	40	39	92.88	84.88	98	18	63	121
											104.5	162.5

Straight modular pitch	Art. Nr.	m	z	A	b	B	D_a	D_0	D_1	L4	L5	L6
Pinion 3	201420	3	20	56.0	30	29	66.0	60.0	98	12.5	63	105.5
											104.5	147
Pinion 4	201520	4	20	75.0	40	39	88.0	80.0	98	18	63	121
											104.5	162.5

Spacer Elements

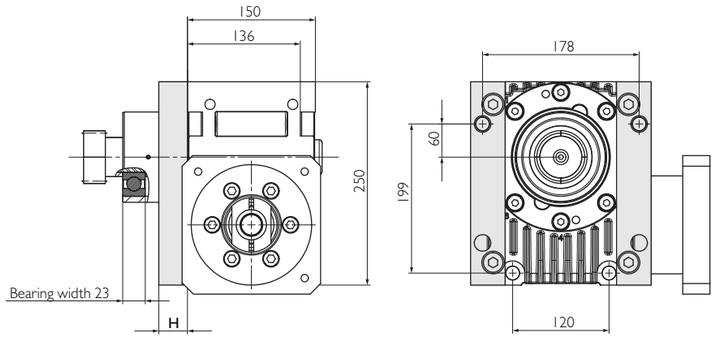

with Pinion special solutions on request

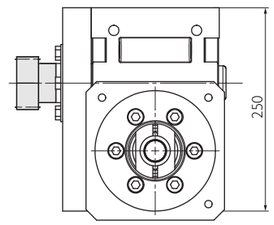

Casing can only be fastened with long screws as per the bore hole pattern.
Screws M12 of length 136mm + **H** + thread depth, tightening torque 50Nm.

Shrink Disc

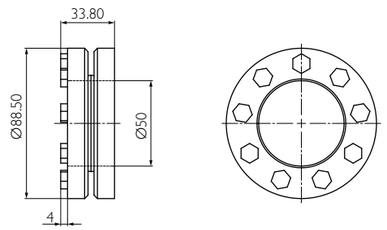

Coupling

Type 1

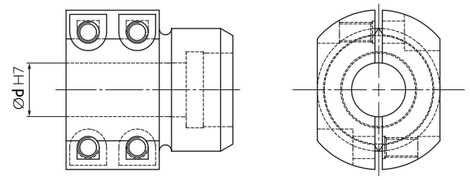

Motor shaft diameter [mm], 14 ≤ Ø**d** ≤ 35

Type 2

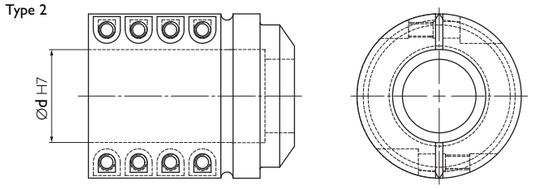

Motor shaft diameter [mm], 36 ≤ Ø**d** ≤ 42

Your ideal Drive Train

Our Function Package with high-performance angle gearbox, output flange, pinion and rack by Güdel.

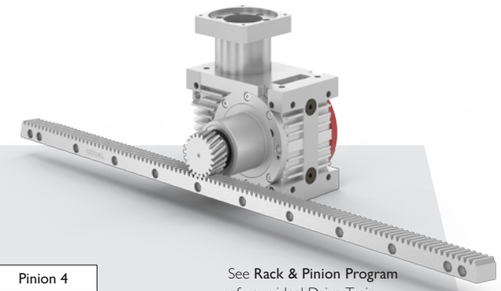

			Pinion 1	Pinion 2	Pinion 3	Pinion 4
Maximum acceleration force	F_N	[N]	13700	25420	13697	24068
Maximum acceleration torque	T_N	[Nm]	436	1079	411	963

Higher value for rack and pinion taking account of the number of load cycles: 1×10^6 for the rack; 1×10^7 for the pinion. Both in cycle mode.

See **Rack & Pinion Program** of your ideal Drive Train on pages 104 et seq.

See **Flowcharts** to find your ideal Drive Train on pages 116 et seq.

Input

A

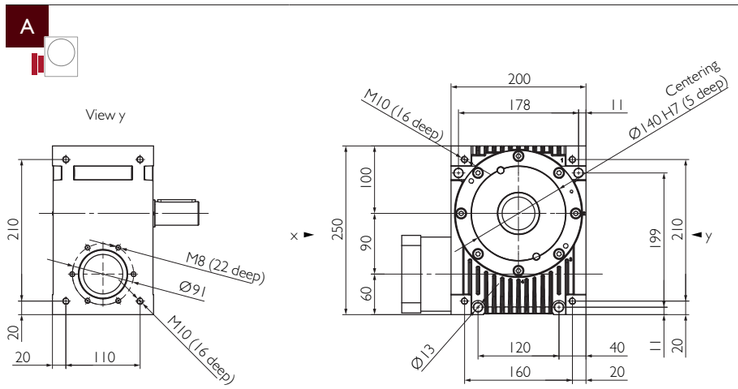

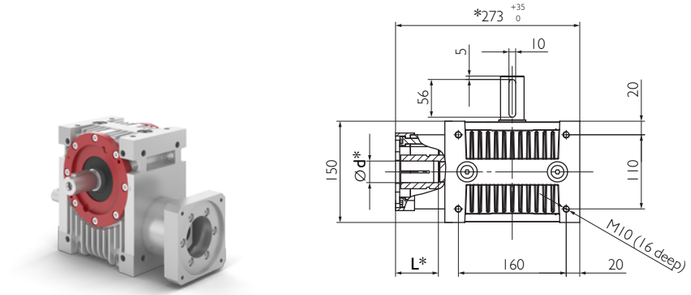

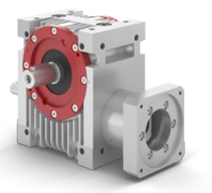

Example HPG 090 B4

B

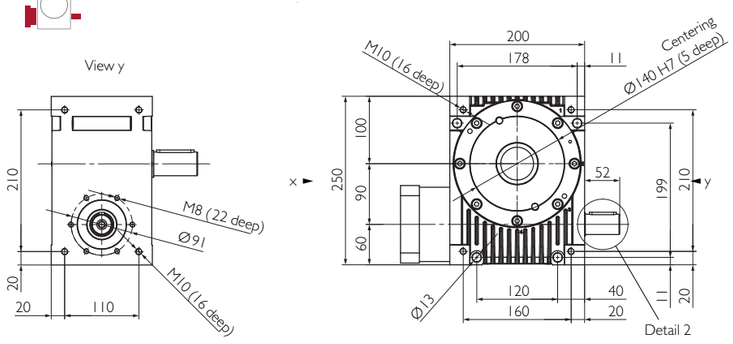

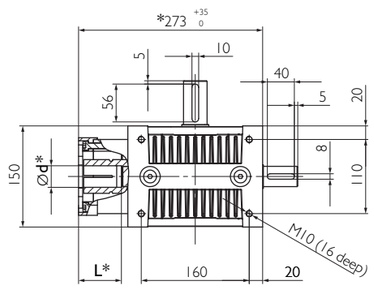

* Motor-specific gearbox dimensions
Ød: Ø motor shaft [mm], 14 ≤ **Ød** ≤ 42
L: Motor shaft length [mm], 40 ≤ **L** ≤ 82

Detail 2

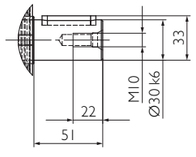

Output

4

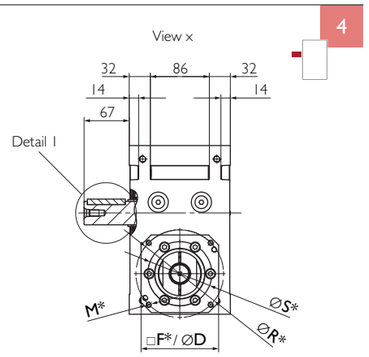

5

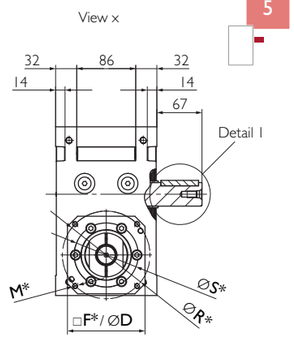

6

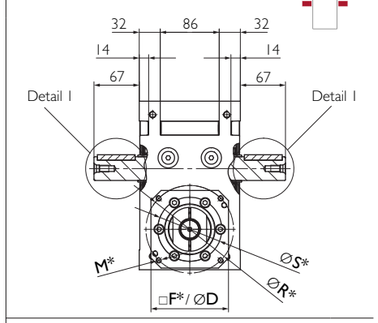

Detail 1

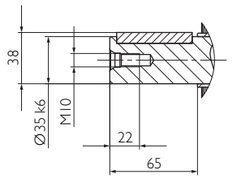

* Motor-specific gearbox dimensions
S: min. 75 [mm], **R:** Pitch circle Ø [mm], **M:** Bore hole Ø or thread [mm], □**F**/Ø**D:** Specify flange [mm]

Ratio		i			2	3	4	5	6	8	10	13.33	16	24	30	47	60
Nominal torque at the output / Efficiency	n_{1N} = 500 rpm	T_{2N}	[Nm]		469	679	784	761	674	782	726	712	700	727	527	752	527
		η	[%]		92	92	91	91	90	88	87	84	80	74	71	61	50
	n_{1N} = 1000 rpm	T_{2N}	[Nm]		350	528	624	615	551	644	601	592	660	645	527	640	527
		η	[%]		92	92	92	92	91	89	88	85	82	76	72	63	57
	n_{1N} = 1500 rpm	T_{2N}	[Nm]		279	432	518	516	466	547	513	507	565	553	527	550	527
		η	[%]		92	93	92	92	91	90	88	85	83	77	72	64	57
	n_{1N} = 3000 rpm	T_{2N}	[Nm]		174	279	343	348	318	377	356	354	395	388	396	386	396
		η	[%]		92	92	92	92	91	89	88	85	82	76	70	62	55
	n_{1N} = 4500 rpm	T_{2N}	[Nm]		126	206	257	262	241	288	273	272	303	298	305	297	305
		η	[%]		91	92	92	91	90	88	86	83	81	74	68	60	53
Max. acceleration torque		T_{2B}	[Nm]		470	790									530	790	530
Emergency stop torque		T_{2Not}	[Nm]		900										700	900	700
Idling torque[a)]		T_{012}	[Nm]		2.8			2.5				2					
Max. input speed		n_{1Max}	[rpm]		4500												
Max. backlash[b)] at the output	PS	j_t	[arcmin]		<10	<8	<7	<7	<6	<6					<5		
	PR	j_t	[arcmin]		<6.5	<5	<4.5	<4	<4	<3.5					<3		
Torsional rigidity vom Abtrieb zum Eintrieb		C_{t21}	[Nm/arcmin]		5.5	10.8	15.9	18.3	20.8	23.3	25.8	28.3	31.3	33.2	32	35	32
Stability at the output		C_{2K}	[Nm/arcmin]		73												
Max. axial force[c)d)] at the output		F_{a2max}	[N]		820	1400	1400	2800	4400	5000	6600	8300	8100	8700	9100	9200	9400
Max. radial force[c)e)] at the output		F_{r2max}	[N]		800	930	1000	1400	3000	3100	3700	4200	4300	4400	4500	4500	4600
Max. overturning torque[c)] at the output		M_{2max}	[Nm]		88	100	110	160	330	350	400	460	470	490	500	500	500
Max. axial force[c)d)] at the input		F_{a1max}	[N]		3100	1600	1100	1700	2800	2000	2700	2900	2300	2500	2700	2600	2800
Max. radial force[c)f)] at the input		F_{r1max}	[N]		1500	910	640	990	1600	1200	1500	1700	1300	1400	1600	1500	1600
Mass moment of inertia[g)]	Type 1[h)]	J_1	[10^{-5} kg m^2]		383	206	144	116	100	85	78	72	70	67	67	66	65
	Type 2[i)]	J_1	[10^{-5} kg m^2]		453	276	214	186	170	155	148	142	140	137	136	136	135
Service life		L_h	[h]		25000												
Weight without motor components		m	[kg]		25												
Max. permissible housing temperature			[°C]		+90												
Ambient temperature			[°C]		-15 up to +50												
Lubrication		synthetic gear oil (as per DIN 51502: CLP PG 460)															
Painting		None															
Protection class		IP65															

a) approximate, at n_1 = 3000 rpm and operating temperature.
b) Precision grade PS (standard backlash) for classic mechanical engineering applications.
Precision grade PR (reduced backlash) for precise process applications.
c) Bearing forces: Values valid at n_1 = 1500 rpm; ½ T_{2N} and duty cycle of 40%.
Consult with Güdel for composite bearing forces, axial and radial forces.
c) d) in relation to shaft center.
c) e) at a distance of 110 mm from the middle of the casing.
c) f) at a distance of 125 mm from the middle of the casing.
g) in relation to the input, including coupling.
g) h) Motor shaft diameter **Ød** from Ø14 to Ø35, calculated at Ø24mm.
g) i) Motor shaft diameter **Ød** from Ø36 to Ø42, calculated at Ø38mm.

Bearing forces

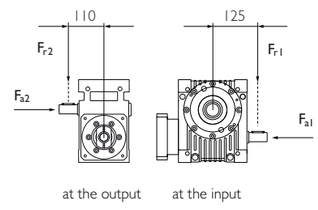

Input

C

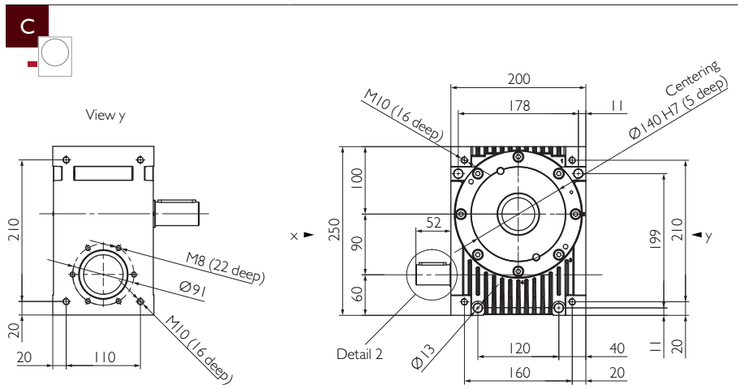

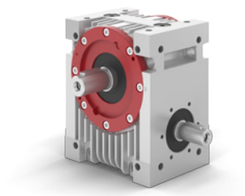

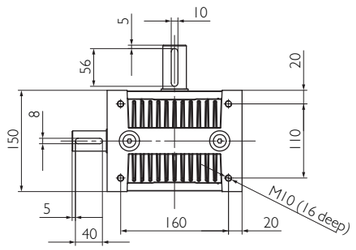

Example HPG 090 C4

D

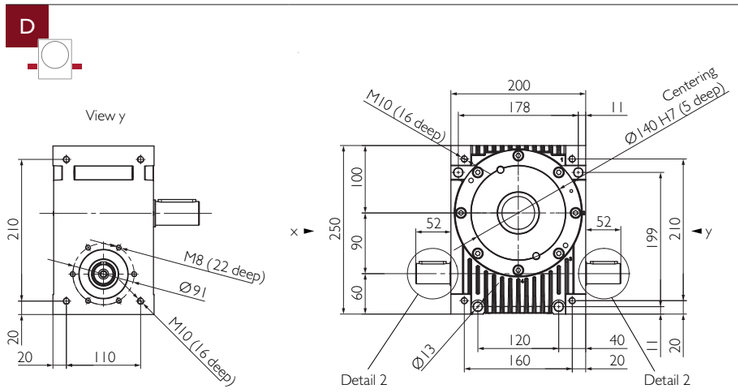

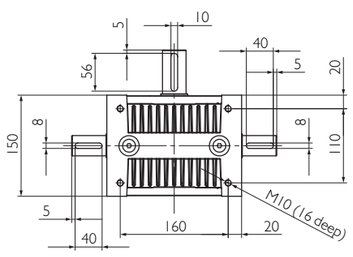

Detail 2

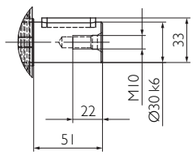

Output

4

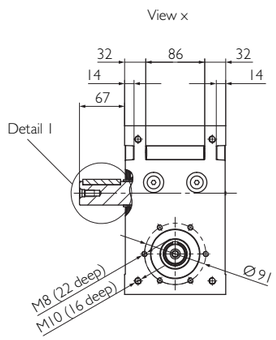

5

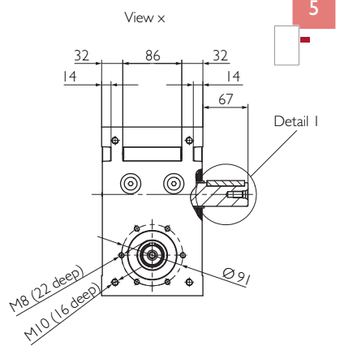

6

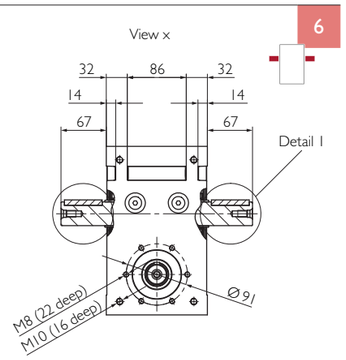

Detail 1

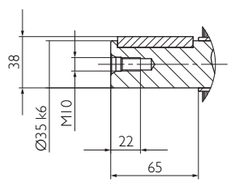

Ratio	i			2	3	4	5	6	8	10	13.33	16	24	30	47	60
Nominal torque at the output Efficiency	n_{1N} = 500 rpm	T_{2N}	[Nm]	469	679	784	761	674	782	726	712	700	727	527	752	527
		η	[%]	92	92	91	91	90	88	87	84	80	74	71	61	50
	n_{1N} = 1000 rpm	T_{2N}	[Nm]	350	528	624	615	551	644	601	592	660	645	527	640	527
		η	[%]	92	92	92	92	91	89	88	85	82	76	72	63	57
	n_{1N} = 1500 rpm	T_{2N}	[Nm]	279	432	518	516	466	547	513	507	565	553	527	550	527
		η	[%]	92	93	92	92	91	90	88	85	83	77	72	64	57
	n_{1N} = 3000 rpm	T_{2N}	[Nm]	174	279	343	348	318	377	356	354	395	388	396	386	396
		η	[%]	92	92	92	92	91	89	88	85	82	76	70	62	55
	n_{1N} = 4500 rpm	T_{2N}	[Nm]	126	206	257	262	241	288	273	272	303	298	305	297	305
		η	[%]	91	92	92	91	90	88	86	83	81	74	68	60	53
Max. acceleration torque		T_{2B}	[Nm]	470	790									530	790	530
Emergency stop torque		T_{2Not}	[Nm]	900										700	900	700
Idling torque[a)]		T_{012}	[Nm]	2.8			2.5				2					
Max. input speed		n_{1Max}	[rpm]	4500												
Max. backlash[b)] at the output	PS	j_t	[arcmin]	<10	<8	<7	<7	<6	<6					<5		
	PR	j_t	[arcmin]	<6.5	<5	<4.5	<4	<4	<3.5					<3		
Torsional rigidity vom Abtrieb zum Eintrieb		C_{t21}	[Nm/arcmin]	5.5	10.8	15.9	18.3	20.8	23.3	25.8	28.3	31.3	33.2	32	35	32
Stability at the output		C_{2K}	[Nm/arcmin]	73												
Max. axial force[c)d)] at the output		F_{a2max}	[N]	820	1400	1400	2800	4400	5000	6600	8300	8100	8700	9100	9200	9400
Max. radial force[c)e)] at the output		F_{r2max}	[N]	800	930	1000	1400	3000	3100	3700	4200	4300	4400	4500	4500	4600
Max. overturning torque[c)] at the output		M_{2max}	[Nm]	88	100	110	160	330	350	400	460	470	490	500	500	500
Max. axial force[c)d)] at the input		F_{a1max}	[N]	3100	1600	1100	1700	2800	2000	2700	2900	2300	2500	2700	2600	2800
Max. radial force[c)f)] at the input		F_{r1max}	[N]	1500	910	640	990	1600	1200	1500	1700	1300	1400	1600	1500	1600
Mass moment of inertia[g)]		J_1	[10^{-5} kg m^2]	336	160	98	70	54	39	32	26	24	21	20	19	19
Service life		L_h	[h]	25000												
Weight without motor components		m	[kg]	22												
Max. permissible housing temperature			[°C]	+90												
Ambient temperature			[°C]	-15 up to +50												
Lubrication	synthetic gear oil (as per DIN 51502: CLP PG 460)															
Painting	None															
Protection class	IP65															

a) approximate, at n_1 = 3000 rpm and operating temperature.
b) Precision grade PS (standard backlash) for classic mechanical engineering applications.
Precision grade PR (reduced backlash) for precise process applications.
c) Bearing forces: Values valid at n_1 = 1500 rpm; ½ T_{2N} and duty cycle of 40%.
Consult with Güdel for composite bearing forces, axial and radial forces.
c) d) in relation to shaft center.
c) e) at a distance of 110 mm from the middle of the casing.
c) f) at a distance of 125 mm from the middle of the casing.
g) in relation to the input.

Bearing forces

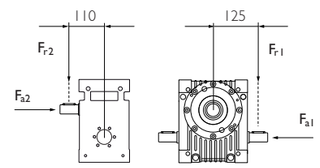

at the output at the input

Input

A

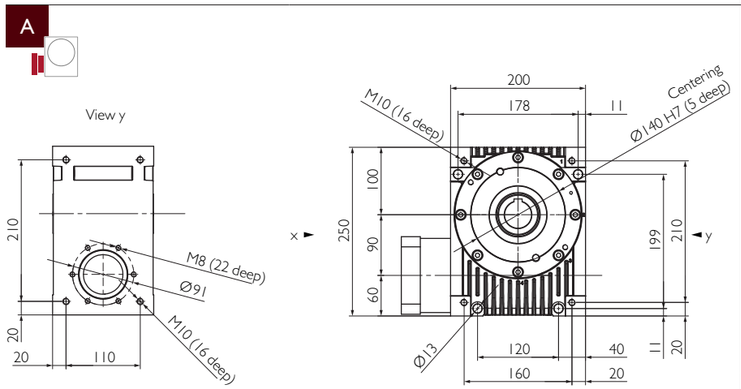

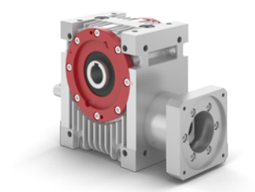

Example HPG 090 B7

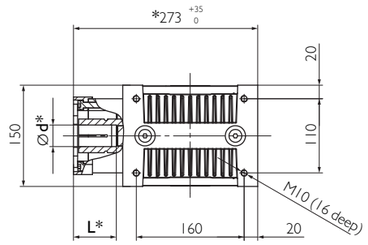

B

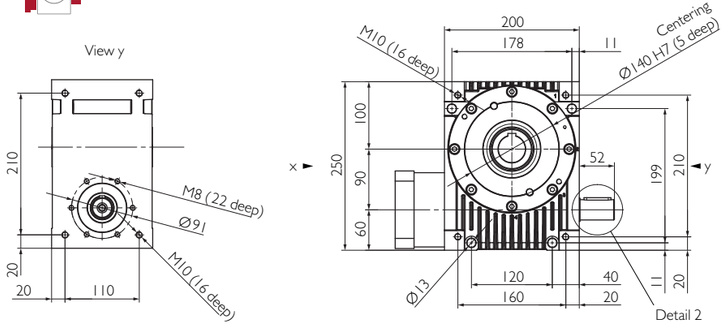

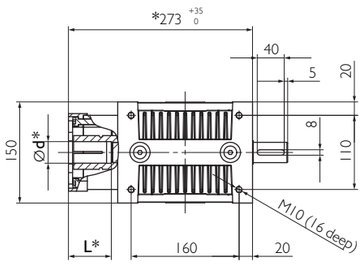

* Motor-specific gearbox dimensions
Ød: Ø motor shaft [mm], 14 ≤ **Ød** ≤ 42
L: Motor shaft length [mm], 40 ≤ **L** ≤ 82

Detail 2

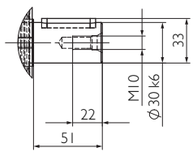

Output

7

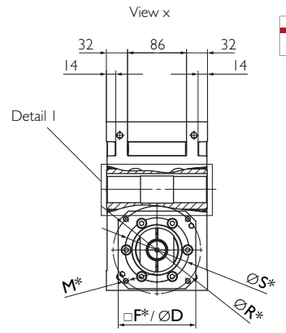

Detail I

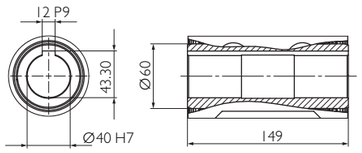

* Motor-specific gearbox dimensions
S: min. 75 [mm], **R:** Pitch circle Ø [mm], **M:** Bore hole Ø or thread [mm], □**F**/Ø**D:** Specify flange [mm]

Ratio		i		2	3	4	5	6	8	10	13.33	16	24	30	47	60
Nominal torque at the output Efficiency	n_{1N} = 500rpm	T_{2N}	[Nm]	469	679	784	761	674	782	726	712	700	727	527	752	527
		η	[%]	92	92	91	91	90	88	87	84	80	74	71	61	50
	n_{1N} = 1000rpm	T_{2N}	[Nm]	350	528	624	615	551	644	601	592	660	645	527	640	527
		η	[%]	92	92	92	92	91	89	88	85	82	76	72	63	57
	n_{1N} = 1500rpm	T_{2N}	[Nm]	279	432	518	516	466	547	513	507	565	553	527	550	527
		η	[%]	92	93	92	92	91	90	88	85	83	77	72	64	57
	n_{1N} = 3000rpm	T_{2N}	[Nm]	174	279	343	348	318	377	356	354	395	388	396	386	396
		η	[%]	92	92	92	92	91	89	88	85	82	76	70	62	55
	n_{1N} = 4500rpm	T_{2N}	[Nm]	126	206	257	262	241	288	273	272	303	298	305	297	305
		η	[%]	91	92	92	91	90	88	86	83	81	74	68	60	53
Max. acceleration torque		T_{2B}	[Nm]	470	790									530	790	530
Emergency stop torque		T_{2Not}	[Nm]	900										700	900	700
Idling torque[a)]		T_{012}	[Nm]	2.8			2.5				2					
Max. input speed		n_{1Max}	[rpm]	4500												
Max. backlash[b)] at the output	PS	j_t	[arcmin]	<10	<8	<7	<7	<6	<6					<5		
	PR	j_t	[arcmin]	<6.5	<5	<4.5	<4	<4	<3.5					<3		
Torsional rigidity vom Abtrieb zum Eintrieb		C_{t21}	[Nm/arcmin]	5.5	10.8	15.9	18.3	20.8	23.3	25.8	28.3	31.3	33.2	32	35	32
Stability at the output		C_{2K}	[Nm/arcmin]	95												
Max. axial force[c)d)] at the output		F_{a2max}	[N]	6200	8200	7800	9200	11000	12000	14000	17000	18000	18000	18000	19000	19000
Max. radial force[c)e)] at the output		F_{r2max}	[N]	5300	6400	5500	5800	6500	6800	7500	8400	8600	8700	8800	8800	8800
Max. overturning torque[c)] at the output		M_{2max}	[Nm]	590	700	600	640	710	750	830	920	940	960	970	970	970
Max. axial force[c)d)] at the input		F_{a1max}	[N]	3100	1600	1100	1700	2800	2000	2700	2900	2300	2500	2700	2600	2800
Max. radial force[c)f)] at the input		F_{r1max}	[N]	1500	910	640	990	1600	1200	1500	1700	1300	1400	1600	1500	1600
Mass moment of inertia[g)]	Type 1[h)]	J_1	[10^{-5} kg m²]	354	193	137	111	97	83	77	72	70	67	66	66	65
	Type 2[i)]	J_1	[10^{-5} kg m²]	424	263	207	181	167	153	147	142	140	137	136	136	135
Service life		L_h	[h]	25000												
Weight without motor components		m	[kg]	25												
Max. permissible housing temperature			[°C]	+90												
Ambient temperature			[°C]	-15 up to +50												
Lubrication				synthetic gear oil (as per DIN 51502: CLP PG 460)												
Painting				None												
Protection class				IP65												

a) approximate, at n_1 = 3000rpm and operating temperature.
b) Precision grade PS (standard backlash) for classic mechanical engineering applications.
Precision grade PR (reduced backlash) for precise process applications.
c) Bearing forces: Values valid at n_1 = 1500rpm; ½ T_{2N} and duty cycle of 40%.
Consult with Güdel for composite bearing forces, axial and radial forces.
c) d) in relation to shaft center.
c) e) at a distance of 110 mm from the middle of the casing.
c) f) at a distance of 125 mm from the middle of the casing.
g) in relation to the input, including coupling.
c) h) Motor shaft diameter **Ød** from Ø14 to Ø35, calculated at Ø24mm.
c) i) Motor shaft diameter **Ød** from Ø36 to Ø42, calculated at Ø38mm.

Bearing forces

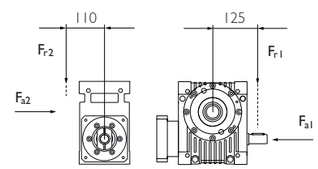

at the output at the input

Input

C

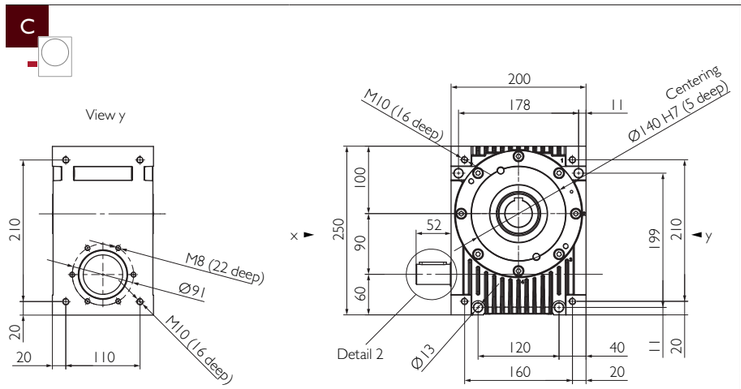

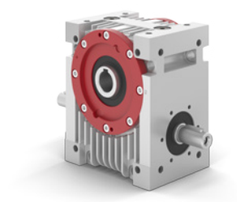

Example HPG 090 D7

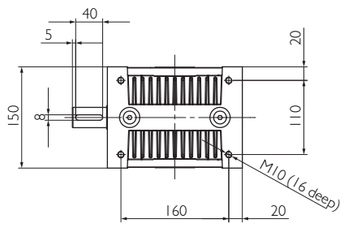

Output

7

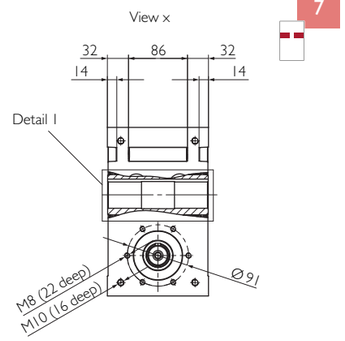

Detail I

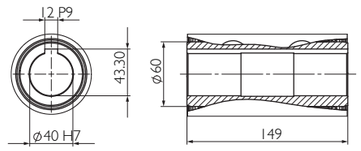

D

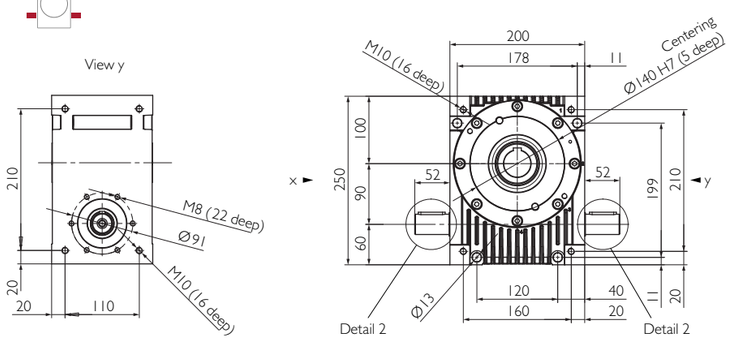

Detail 2

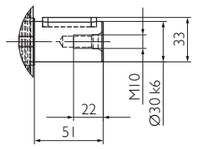

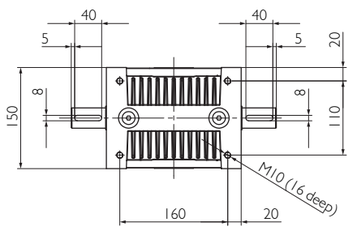

Ratio	i			2	3	4	5	6	8	10	13.33	16	24	30	47	60
Nominal torque at the output Efficiency	n_{1N} = 500rpm	T_{2N}	[Nm]	469	679	784	761	674	782	726	712	700	727	527	752	527
		η	[%]	92	92	91	91	90	88	87	84	80	74	71	61	50
	n_{1N} = 1000rpm	T_{2N}	[Nm]	350	528	624	615	551	644	601	592	660	645	527	640	527
		η	[%]	92	92	92	92	91	89	88	85	82	76	72	63	57
	n_{1N} = 1500rpm	T_{2N}	[Nm]	279	432	518	516	466	547	513	507	565	553	527	550	527
		η	[%]	92	93	92	92	91	90	88	85	83	77	72	64	57
	n_{1N} = 3000rpm	T_{2N}	[Nm]	174	279	343	348	318	377	356	354	395	388	396	386	396
		η	[%]	92	92	92	92	91	89	88	85	82	76	70	62	55
	n_{1N} = 4500rpm	T_{2N}	[Nm]	126	206	257	262	241	288	273	272	303	298	305	297	305
		η	[%]	91	92	92	91	90	88	86	83	81	74	68	60	53
Max. acceleration torque		T_{2B}	[Nm]	470	790									530	790	530
Emergency stop torque		T_{2not}	[Nm]	900										700	900	700
Idling torque[a)]		T_{012}	[Nm]	2.8			2.5				2					
Max. input speed		n_{1Max}	[rpm]	4500												
Max. backlash[b)] at the output	PS	j_t	[arcmin]	<10	<8	<7	<7	<6	<6					<5		
	PR	j_t	[arcmin]	<6.5	<5	<4.5	<4	<4	<3.5					<3		
Torsional rigidity vom Abtrieb zum Eintrieb		C_{t21}	[Nm/arcmin]	5.5	10.8	15.9	18.3	20.8	23.3	25.8	28.3	31.3	33.2	32	35	32
Stability at the output		C_{2K}	[Nm/arcmin]	95												
Max. axial force[c)d)] at the output		F_{a2max}	[N]	6200	8200	7800	9200	11000	12000	14000	17000	18000	18000	18000	19000	19000
Max. radial force[c)e)] at the output		F_{r2max}	[N]	5300	6400	5500	5800	6500	6800	7500	8400	8600	8700	8800	8800	8800
Max. overturning torque[c)] at the output		M_{2max}	[Nm]	590	700	600	640	710	750	830	920	940	960	970	970	970
Max. axial force[c)d)] at the input		F_{a1max}	[N]	3100	1600	1100	1700	2800	2000	2700	2900	2300	2500	2700	2600	2800
Max. radial force[c)f)] at the input		F_{r1max}	[N]	1500	910	640	990	1600	1200	1500	1700	1300	1400	1600	1500	1600
Mass moment of inertia[g)]		J_1	[10^{-5} kg m^2]	308	147	91	65	51	37	30	25	23	21	20	19	19
Service life		L_h	[h]	25000												
Weight without motor components		m	[kg]	22												
Max. permissible housing temperature			[°C]	+90												
Ambient temperature			[°C]	-15 up to +50												
Lubrication		synthetic gear oil (as per DIN 51502: CLP PG 460)														
Painting		None														
Protection class		IP65														

a) approximate, at n_1 = 3000rpm and operating temperature.

b) Precision grade PS (standard backlash) for classic mechanical engineering applications.
Precision grade PR (reduced backlash) for precise process applications.

c) Bearing forces: Values valid at n_1 = 1500rpm; ½ T_{2N} and duty cycle of 40%.
Consult with Güdel for composite bearing forces, axial and radial forces.
c) d) in relation to shaft center.
c) e) at a distance of 110 mm from the middle of the casing.
c) f) at a distance of 125 mm from the middle of the casing.

g) in relation to the input.

Bearing forces

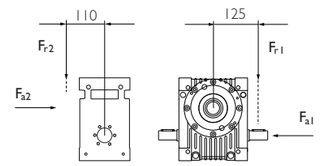

at the output at the input